Spec No.: ZTT 19-101103

TECHNICAL SPECIFICATION

Aluminum Conductor Steel Reinforced

A	January 10, 2020	Luffy	Peter	Felix
Version	**Date**	**Prepared**	**Reviewed**	**Approved**

Address: No.5, Zhongtian road, Nantong economic and technological development zone, Jiangsu Province, China
Tel: +86-513-89191138 Fax: +86-513-8359 9670 Zip code: 226010 Website: www.zttcable.com

1. SCOPE

This specification covers the general requirements and performance of conductor which ZTT offered including electrical characteristics, mechanical characteristics, packing information etc.

2. QUALITY CONTROL STANDARD

ISO 9001 Quality Management Systems

ISO 14001 Environmental Management Systems

OHSAS 18001 Occupational Health and Safety Management Systems

3. TEST AND INSPECTION

ACSR shall be accordance with applicable standard of ACSR and requirements of customer. The following test items shall be carried out according to corresponding reference.

No	Item	Reference
Tests for Steel Wire		
1	Dimensions	EN 50189
2	Tensile strength	EN 50189
3	Elongation	EN 50189
4	Torsion	EN 50189
5	Mass of zinc	EN 50189
Tests for Aluminum Wire		
1	Dimensions	EN 60889
2	Tensile strength	EN 60889
3	Wrapping	EN 60889
4	Resistivity test	EN 60889
Tests for Conductor		
1	Dimensions	EN 50182
2	Lay ratio and direction of lay	EN 50182
3	Number and type of wires	EN 50182
4	Mass per unit length	EN 50182

4. CONSTRUCTION AND SPECIFICATION FOR ACSR

4.1. Conductor Structure

ACSR- AFLs-10 300mm^2

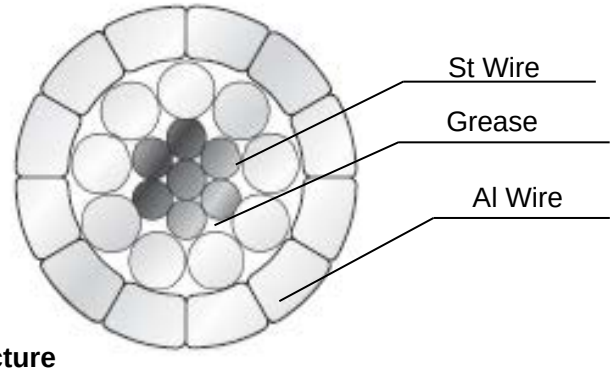

4.1.1. Conductor Technical Structure

Parameter			Unit	Value
Structure	Center: Steel wire		Nos./mm	1/2.4
	Layer 1: Steel wire			6/2.4
	Layer 2: Aluminum wire（Round wires）			9/3.80
	Layer 3: Aluminum wire（Trapezoidal wires）			12/4.58
Standard			/	EN 50182/50189/60889
Stranding direction of outer layer			Direction	Right-hand
Conductor diameter			mm	21.70
Cross section		Aluminum area	mm^2	299.76
		Steel area		31.65
		Total		331.41
Conductor weight			kg/km	1077.3
Total weight（only steel core greased）			kg/km	1083.3
Rated tensile strength			kN	86.04
Modulus of Elasticity			GPa	67.53
Coefficient of linear expansion			10^{-6}/℃	20.00
Max. DC Resistance at 20℃			Ω/km	0.0976
Lay ratio	Aluminum layer		times	12-wire layer 10-14 9-wire layer 10-16
	Steel layer			6-wire layer 16-26
Dropping point			℃	120

4.1.2. Properties of Aluminum Wire (Before Stranding)

Parameter	Unit	Value	
Diameter and tolerance	mm	4.58±0.05（TW）	3.8+0/-0.05
Min. tensile strength	MPa	160	160
Max. resistivity at 20℃	$\Omega \cdot mm^2/m$	0.028264	0.028264

4.1.3. Properties of Steel wire (Before stranding)

Parameter	Unit	Value
Diameter and tolerance	mm	2.4+0.05/-0.00
Min. tensile strength	MPa	1350
Min. tension at 1% elongation	MPa	1140
Min elongation at 250 mm	%	3.0
Class of zinc coating	/	Class A
Min. mass of zinc Coating	g/m^2	230

Note: All Sizes and Values are Nominal Value

5. PACKING AND DRUM FOR CONDUCTOR

The required marking shall be printed with a weather-proof material on the outsides of drum according to customer's requirement.

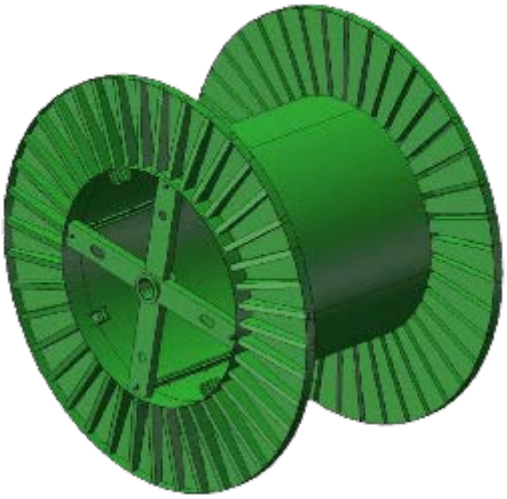

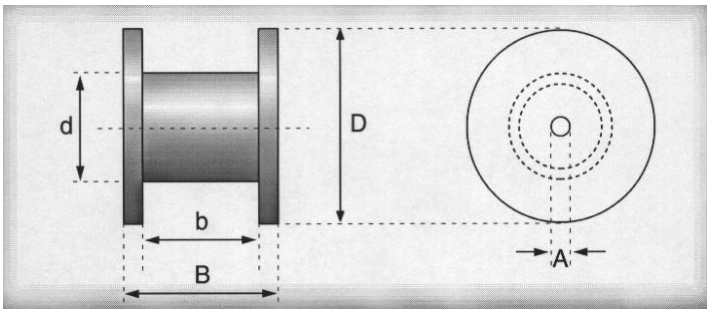

Cable Type	Drum Length (m)	Drum Dimensions					Gross Weight (Approx.) kg	Drum Type
		D mm	d mm	B mm	b mm	A mm		
ACSR AFLs-10 300	3200	1800	700	1100	900	105	3710	Steel